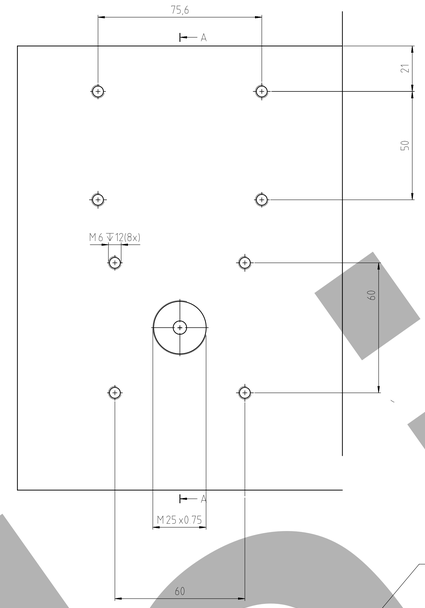

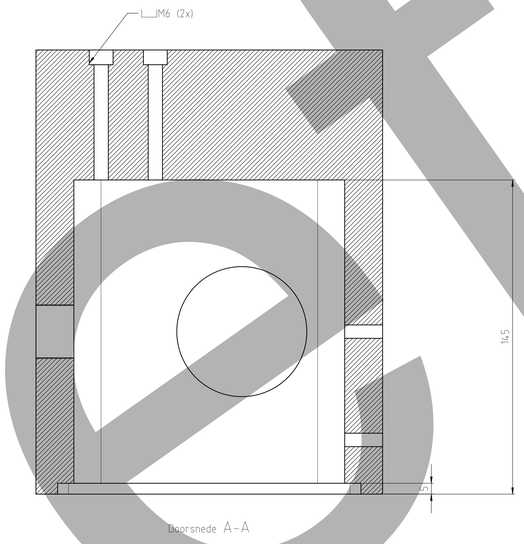

Doorsnede A-A

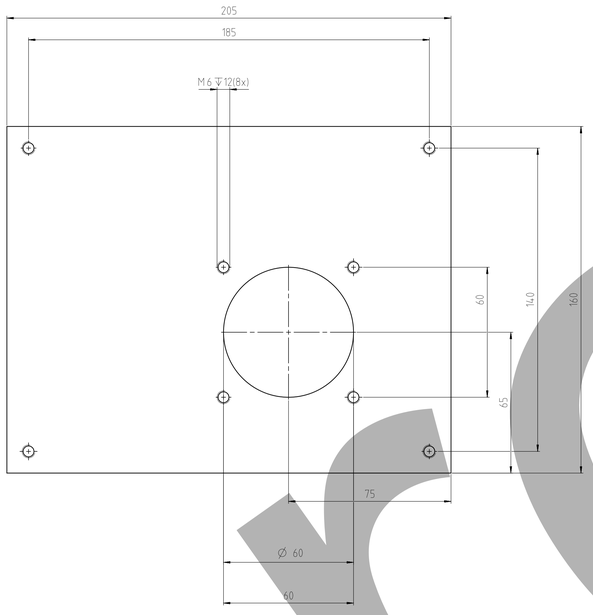

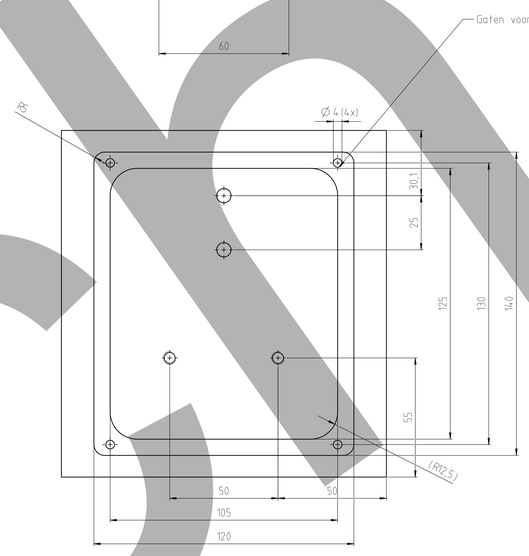

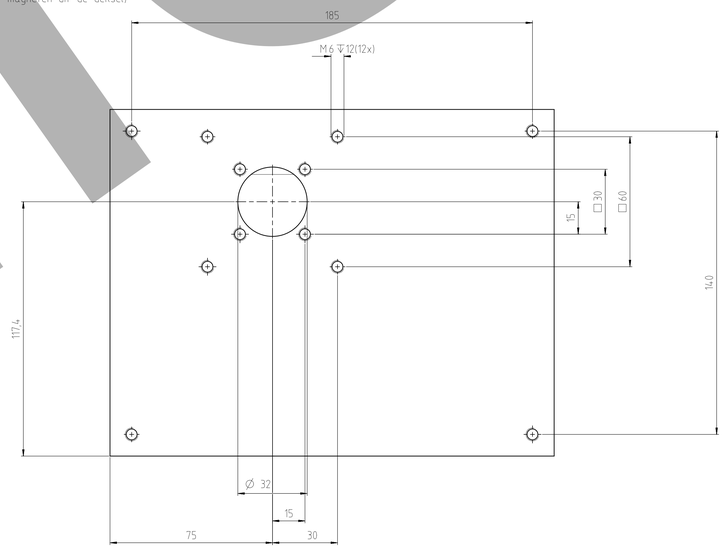

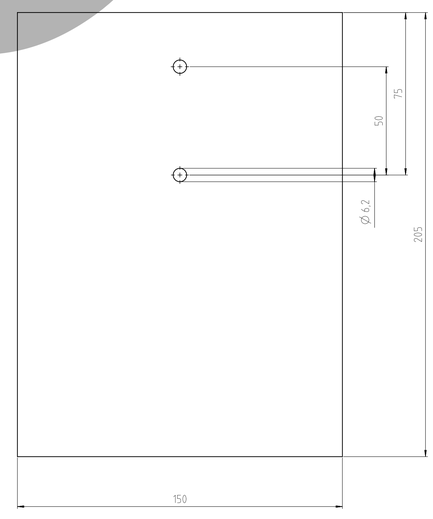

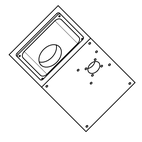

SCALE 1:5

Item	Qty	Partname	Material	Partnumber/Remarks
01	1	K2 Cube	AL6082	Zwart Anodiseren

Physics of Cellular Interactions

01 K2-K2 Assembly

	Date	Name
DRN	27-11-2018	MV
PRO	07-08-2019	MV

scale 1:1 — 0 — 50 — Dim in mm

General tolerances unless otherwise specified: ISO-2768-fH-E

Geometrical tolerances unless otherwise specified: ISO-8015-E

Surface roughness of machined surfaces unless otherwise specified: 1,5 Ra (maximum standard) 1,6 Ra (ISO1302 Rgoal)

AMOLF

Size: A0

Partnumber: CELIN-01-01-01

Number of sheets 1 of 1

This drawing may not be used for commercial purposes without written authorisation

archief